mV 600

Advanced ORP Controller

- Accurate, reliable and simple to install
- Fully programmable microprocessor memory
- 3 month back-up power supply
- Fail-safe alarm system
- Simple wiring with removable terminal modules

ISO 9001 Certified

1 Stop Shopping for All Your Water Treatment Needs

HANNA® instruments
Water Analysis & Control Division

The Hanna mV 600 is simple, cost effective, and environmentally friendly

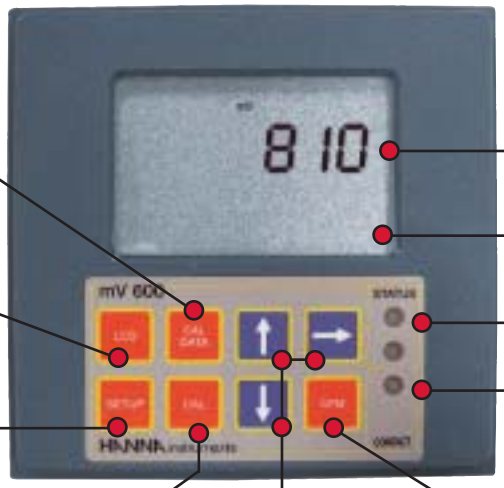

Recalls the calibration data to insure accuracy and compliance with procedures

Displays the various parameters and returns to normal operation mode

A 4-digit password protects the setup parameters to prevent tampering

Simple automatic calibration and temperature compensation with visual prompts

Hi-tech microprocessor puts a host of variables at your disposal to fine tune your process, save on chemicals and meet regulatory requirements

17 mm high 4 1/2 digit primary display visible from a distance

10 mm high 3 1/2 digits secondary display showing temperature or calibration data

Fixed or intermittent red, green and yellow LED's signal status from a distance

CFM key confirms calibration data and acts as the ENTER key

The Hanna line of industrial microprocessor-based controllers offers a multitude of possibilities such as single and dual setpoints, ON/OFF, proportional and PID control, relay outputs, user-selectable zoom, bidirectional isolated RS 232, isolated recorder outputs in mAmps and volts, differential input, control through analog output and Fail Safe Features.

Simple to use

The large, dual-level LCD shows both mV and temperature and guides operators through calibration and programming with step-by-step prompts. The choice of ON/OFF, proportional and PID control provides extra versatility and makes it possible to pick the process controller that best fits your application. Keeping track of multiple controllers in different plants is made easy. These advanced controllers can be identified with both a factory and process ID.

Fail-Safe Protection

The Fail-Safe alarms protect processes against critical errors arising from power interruptions, surges and human errors. The sophisticated yet easy-to-use system resolves these problems on two fronts: hardware and software. To eliminate blackout and line failure problems, the alarm function operates in a "Normally Closed" state and goes off if the wires are accidentally tripped or when the power is down. This is an important feature that solves a common process instrument problem where the alarm terminals close in abnormal situations, and no alarm is sounded with a line interruption, causing extensive damage. With our controllers, software is employed to set off the alarm in abnormal circumstances. For example, if the dosing terminals are closed too long (as with line interruption), red LED's will provide a visual warning signal.

Save Money with Custom Programs

The **mV 600** series controller puts a host of parameters at your disposal to prevent overdosing or costly system failures. You can set your high and low set point hysteresis bands independently to fine tune dosing processes with the ON/OFF controllers. Similarly, the proportional band and time period are user-programmable to save on slow reacting chemicals which are commonly overdosed. This advanced series of controllers also includes models featuring PID (Proportional Integrative Derivative) control. The instrument can be set to P, PI and PID to suit your application. The **mV 600** offers an adjustable timer from 10 minutes to 7 days as the maximum time that the relay contacts may remain closed, an important feature in case of sudden chemical depletion, truncated intake or discharge tubing and other calamities. With these silicon guardians, users can rest assured that processes are operating efficiently and safely.

Galvanically Isolated Outputs with Zoom

Some models incorporate hardware, selectable isolated current or voltage output. These can drive auxiliary devices, chart recorders and provide remote monitoring. Users can also zoom in to any 2 points from the full-measurement scale. This line of industrial controllers include models that provide control through analog output. Now any compatible device such as electrovalves or pumps may be driven with these advanced controllers.

Password Protection

Hanna's password protection feature keeps these controllers safe from tampering. Only users with the proper password can change the settings of these hi-tech controllers.

mV 600

Advanced ORP Controller

The **mV 600** series controllers with microprocessor technology are highly sophisticated yet easy to use. A simple program menu offers standard features such as password protection, control relay enabling/disabling, high/low set point, and adjustable hysteresis for custom programming control. The **mV 600** series controllers have a 4-20 mA output with a zoom function to allow better resolution on any two points between 0 and 2000 mV. The fully-programmable microprocessor comes complete with a 3 month back-up power supply to maintain all set point and parameters during power interruptions. Easy 1 or 2-point calibration at 0, 350 and 1900 mV ensures accuracy and reliability. An additional standard feature of the **mV 600** series is a differential circuit which eliminates ground loops from the process being monitored and significantly extends the life of the electrode.

A short list of the outstanding features of the mV 600 accessible by simply keying in the appropriate code:

- Two ID numbers to identify a specific process in a particular factory
- High and low setpoints can be adjusted with 0.01 pH, 1 mV, 0.1 µS and 0.01 ppm resolution
- The hysteresis bands in ON/OFF controls can be regulated with 0.01 pH, 1 mV, 0.1 µS and 0.01 ppm resolution
- The span in proportional controls can be fine tuned in all measurement ranges
- Two independent alarm bands for high and low setpoints to guarantee a timely warning
- Choose the max. time, the relay contacts may remain closed before the alarm is sounded off
- Choose from six mA or VDC analog outputs and fine tune the pH/mV/EC/TDS range (e.g. 4.00-11.00)
- Setting date and time of last calibration. The data is retained for 3 months even with power off

Specifications	mV 600111	mV 600121
Range	-2000 to 2000 mV	
Resolution	1 mV	
Accuracy (@20°C/68°F)	±2 mV	
Typical EMC Deviation	±10 mV	
Input	High impedance 10^{12} Ohm	
Calibration	At 0 and 350 or 1900 mV	
Readout	4 1/2 digit dual-level LCD display with graphic symbols and messages	
Outputs	Analog: isolated 0 to 1 mA, 0 to 20mA, and 4 to 20 mA (max. resistive load 1 KΩ); 0 to 5VDC, 1 to 5VDC, and 0 to 10VDC (min. resistive load 1KΩ)	
Setpoint Relay	SPDT NO contact output 5A-250 VAC, 5A-30VDC (resistive load)	
Dosage	ON/OFF control	Proportional control
Environment	32 to 122°F (0 to 50°C); max. RH 85% non-condensing	
Power Supply	115V ±10% or 230V ±10% VAC; 50/60Hz	
Dimensions	1/2 DIN 5.7 x 5.7 x 6.7" (144 x 144 x 170 mm)	
Panel Cutout	5.5 x 5.5" (140 x 140 mm)	
Weight	3.5 lb. (1.6 Kg)	

Ordering Information

mV 600111 ORP controller, single setpoint, On/Off control, analog output.

mV 600121 ORP controller, single setpoint, proportional control, analog output.

Recommended Accessories

HI 6200405 Amplified Flat-tip platinum combination ORP electrode with matching pin, 5 m (16.5') cable, & BNC connector
HI 2002/5 .....ORP Pt electrode with 16.5' (5 m) cable
HI 2003/5 .....ORP Pt electrode with matching pin (for grounding) with 16.5' (5 m) cable

Options available: PID control • RS232 output • Solid state relays • Analog output for pump control • 230V power supply

Mechanical Dimensions for mV 600

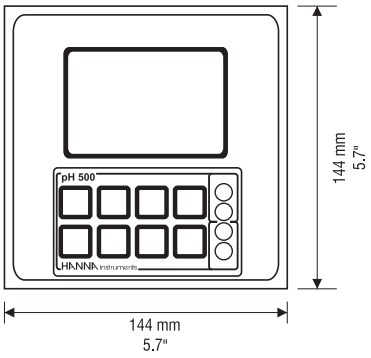

Front View

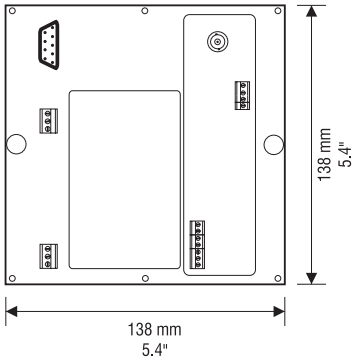

Back View

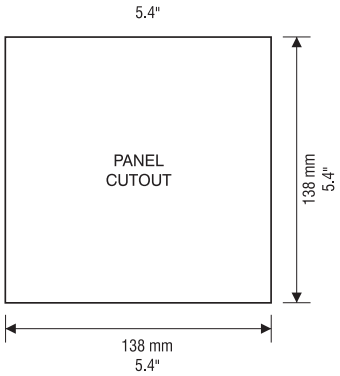

Panel Cutout

Quality electrodes for high pressure industrial applications.

Specifications for recommended mV 600 Probes

HI 6200405
Amplified combination flat-tip, platinum ORP electrode

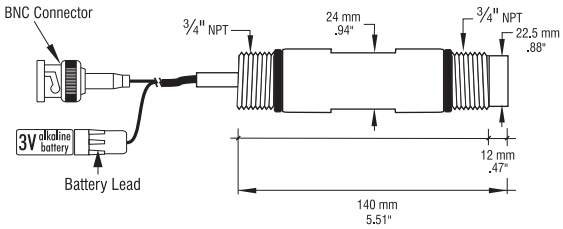

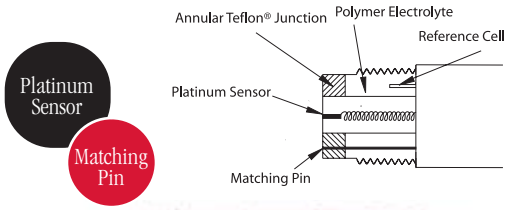

Specifications	HI 6200405
Reference System	
Junction	Double
Type	Teflon®
Electrolyte	Polymer
Temperature	-5 to 100°C)
Max Pressure	87 psi (6 bar)
Lead	
Connector	BNC
Cable	16.5' (5 m)

HI 2002/5 • HI 2003/5
Combination ORP, Platinum electrodes

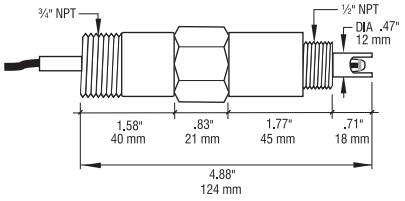

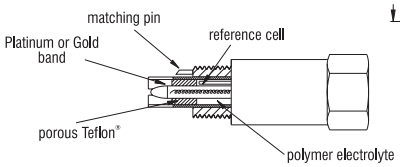

Specifications	HI 2002/5 • HI 2003/5
Reference System	
Junction	Double
Type	Teflon®
Electroly te	Polymer
Temperature	23 to 176°F (-5 to 80°C)
Max Pressure	87 psi (6 bar)
Lead	
Connector	BNC
Cable	16.5' (5 m)

Authorized Distributor:

HANNA® instruments
Water Analysis & Control Division

ISO 9001 Certified

Hanna Instruments Water Analysis & Control Division • 43180 Business Park Drive, Suite A-201, Temecula, CA 92590 • Tel.: 888 426.6222 / Fax: 909 693.5213 • email: water@hannainst.com / web: www.hannainst.com

P/L WACDMV600 07/03 PRINTED IN USA